INDIAN INSTITUTE OF TECHNOLOGY

EE-3202

Power System II

Experiment-4

Submitted By:

Shaurya Aggarwal

2301EE56

Swing Equation

Aim-

Q. A 50 Hz synchronous generator having inertia constant H = 5 sec and a direct axis reactance Xd' = 0.3 p.u. is connected to an infinite bus through a transformer and a double circuit line. The synchronous generator is delivering real power P = 0.8 p.u. and reactive power Q = 0.074 p.u. to the infinite bus of 1.0 p.u. at steady state.

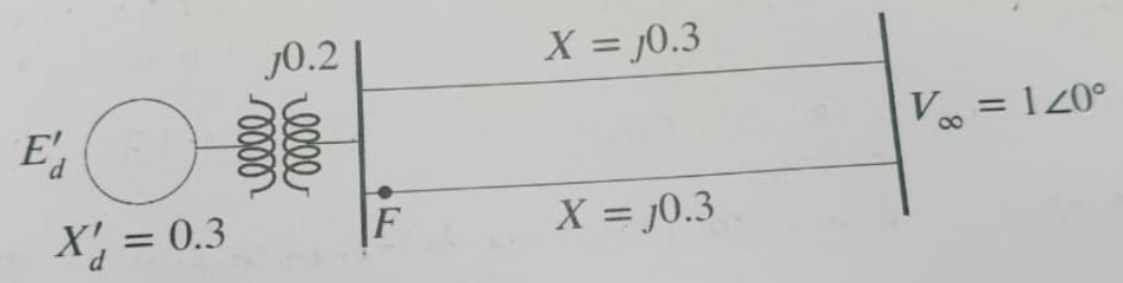

A temporary three-phase fault occurs at point F. Determine the critical clearing time of the system. Further, develop an appropriate model of the system in Simulink to analyse its transient stability for fault clearing times of 0.20 seconds and 0.30 seconds by observing the rotor angle (swing curve) response.

Calculation-

i) Finding δ_0 :

$$P_e = (P_{max}) \sin \delta_0$$

$$\therefore \delta_0 = \sin^{-1}\left(\frac{P_e}{P_{max}}\right)$$

$$\delta_0 = \sin^{-1}\left(\frac{0.8}{1.8}\right)$$

$$\boxed{\delta_0 = 26.38^\circ = 0.46^c}$$

$$P_{max} = \left(\frac{EV}{X}\right)$$

$$E = V + IX$$

$$I = \frac{S^*}{V^*} = (0.8 - j0.074)$$

$$E = (1.17) \angle 26.38^\circ$$

$$P_{max} = \left(\frac{1.17 \angle 26.38^\circ}{0.6 \angle 90^\circ}\right) = (1.8 \angle -63.6^\circ)$$

ii) $\delta_{max} = (180^\circ - 26.38^\circ) = (153.62^\circ) = (2.68^c)$

iii) $$\delta_{cr} = \cos^{-1}\left(\frac{P_m(\delta_{max} - \delta_0) + P_{max}\cos(\delta_{max})}{P_{max}}\right)$$

$$\delta_{cr} = \cos^{-1}\left(\frac{0.8(2.68 - 0.46) + 1.8\cos(153.62)}{1.8}\right)$$

$$\delta_{cr} = \cos^{-1}\left(\frac{1.776 - 1.61}{1.8}\right) = \boxed{84.8^\circ}$$

iv) $$t = \sqrt{\frac{2H(\delta_{cr} - \delta_0)}{\pi f P_m}} = \sqrt{\frac{2 \times 5 \times (1.47 - 0.46)}{3.14 \times 50 \times 0.8}} = \boxed{0.28 \text{ sec.}}$$

Simulation-

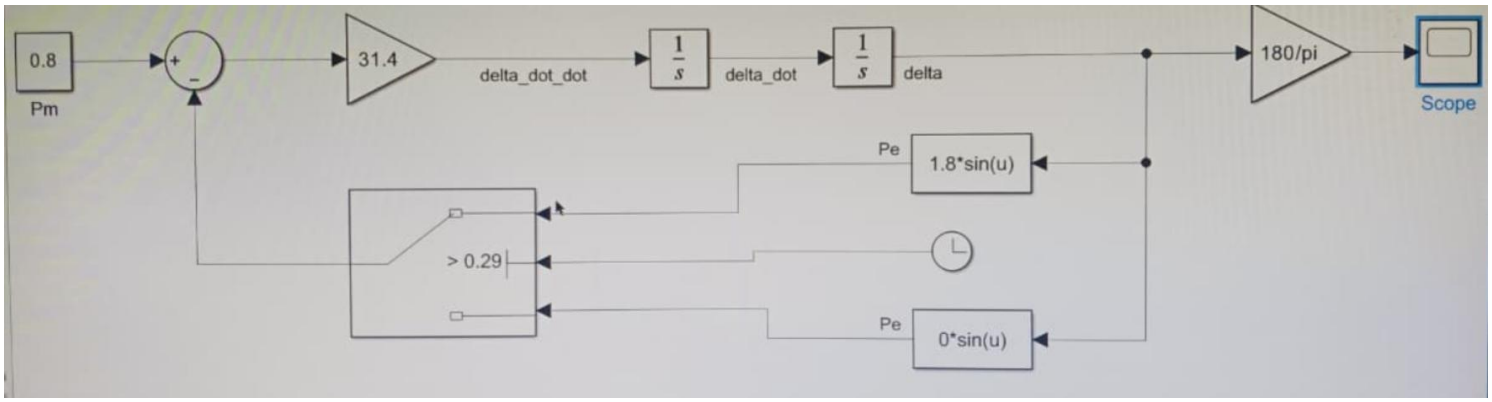

Outputs-

1. For 0.29:

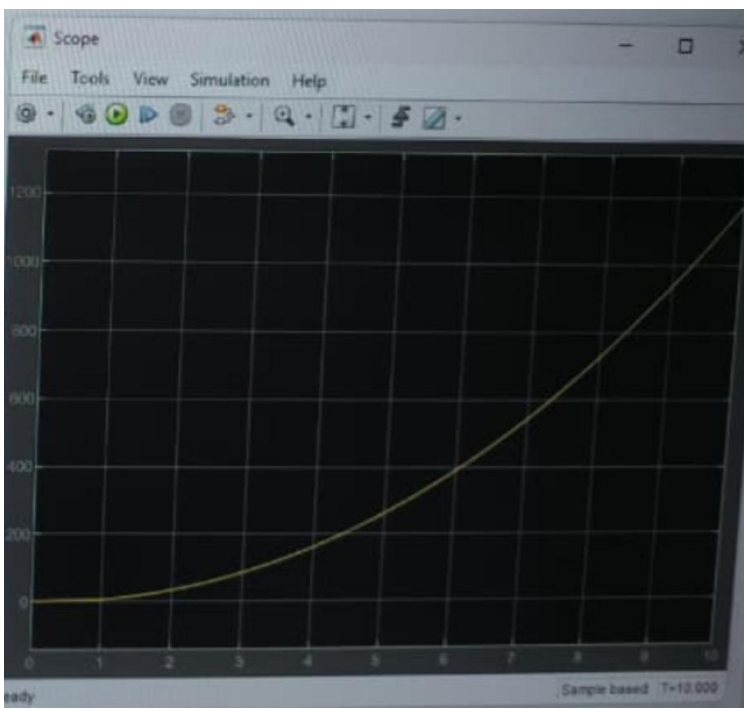

2. For 0.28

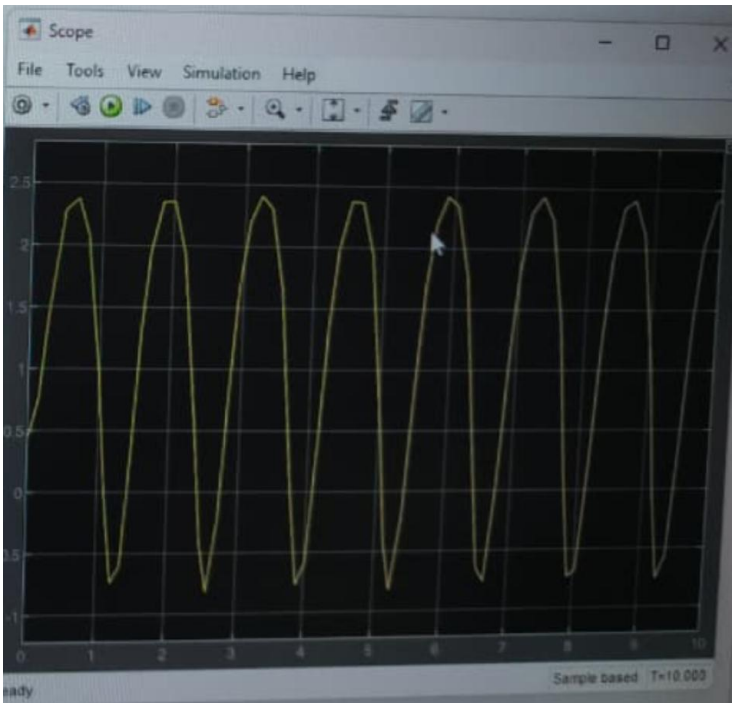
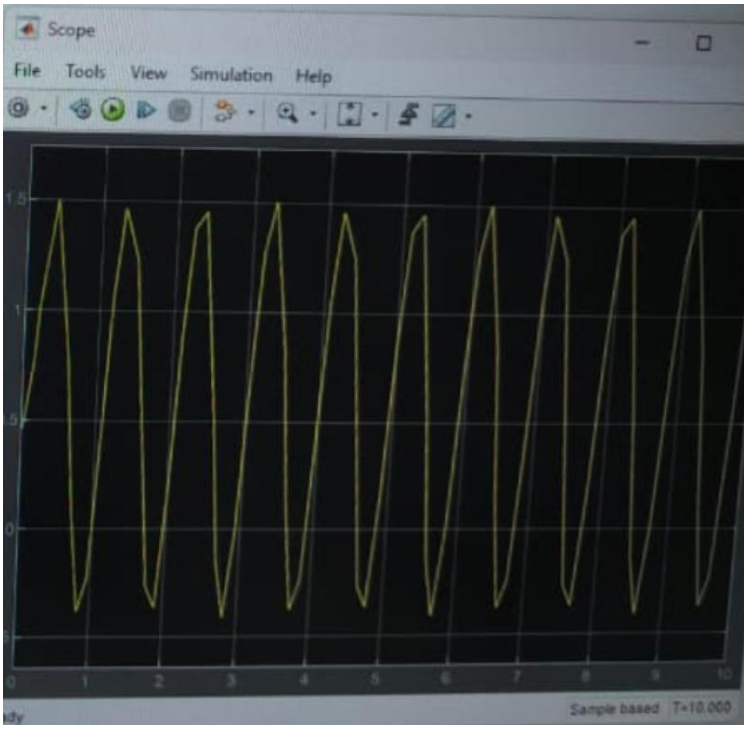
3. For 0.21: